ER Spring Collet Chuck System

SUPER ULTRA PRECISION TYPE

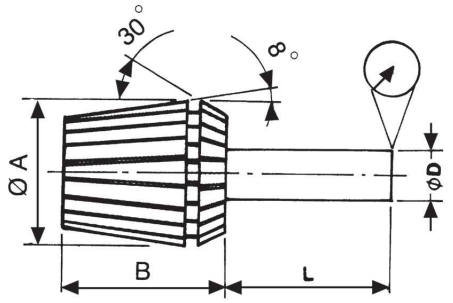

DIMENSIONS

TYPE	D	H
ER08	8.5	13.5
ER11	11.5	18
ER16	17	27
ER20	21	31
ER25	26	35
ER32	33	40
ER40	41	46
ER50	52	60

S GRADE Accuracy

L(mm)	øD(mm)	Ultra Precision(MM)
6	1.0-1.4	0.01
10	1.5-2.9	0.01
16	3.0-5.9	0.01
25	6.0-9.9	0.01
40	10.0-17.9	0.01
50	18.0-26.9	0.01
60	27.0-34.9	0.01

TYPE	ER-8			ER-11			ER-16			ER-20		
COMPLET SET	9PCS/SET			7PCS/SET			10PCS/SET			12PCS/SET		
FULL SET	ORDER NO.	CAP. mm Ø	CODE NO.	ORDER NO.	CAP. mm Ø	CODE NO.	ORDER NO.	CAP. mm Ø	CODE NO.	ORDER NO.	CAP. mm Ø	CODE NO.
	V08000S	0.5-5.0	3000-001	V11000S	0.5-7.0	3000-002	V16000S	0.5-10.0	3000-003	V20000S	1-13	3000-004
INDIVIDUAL UNIT	V08010S	1.0-0.5	3000-010	V11010S	1.0-0.5	3000-020	V16010S	1.0-0.5	3000-040	V20020S	2-1	3000-060
	V08015S	1.5-1.0	3000-011	V11020S	2.0-1.5	3000-021	V16020S	2.0-1.0	3000-041	V20030S	3-2	3000-061
	V08020S	2.0-1.5	3000-012	V11030S	3.0-2.5	3000-022	V16030S	3.0-2.0	3000-042	V20040S	4-3	3000-062
	V08025S	2.5-2.0	3000-013	V11040S	4.0-3.5	3000-023	V16040S	4.0-3.0	3000-043	V20050S	5-4	3000-063
	V08030S	3.0-2.5	3000-014	V11050S	5.0-4.5	3000-024	V16050S	5.0-4.0	3000-044	V20060S	6-5	3000-064
	V08035S	3.5-3.0	3000-015	V11060S	6.0-5.5	3000-025	V16060S	6.0-5.0	3000-045	V20070S	7-6	3000-065
	V08040S	4.0-3.5	3000-016	V11070S	7.0-6.5	3000-026	V16070S	7.0-6.0	3000-046	V20080S	8-7	3000-066
	V08045S	4.5-4.0	3000-017	V11015S	1.5	3000-027	V16080S	8.0-7.0	3000-047	V20090S	9-8	3000-067
	V08050S	5.0-4.5	3000-018	V11025S	2.5	3000-028	V16090S	9.0-8.0	3000-048	V20100S	10-9	3000-068
				V11035S	3.5	3000-029	V16100S	10.0-9.0	3000-049	V20110S	11-10	3000-069
				V11045S	4.5	3000-030	V16015S	1.5	3000-050	V20120S	12-11	3000-070
				V11055S	5.5	3000-031	V16025S	2.5	3000-051	V20130S	13-12	3000-071
				V11065S	6.5	3000-032	V16035S	3.5	3000-052	V20010S	1.0	3000-072
							V16045S	4.5	3000-053	V20025S	2.5	3000-073
							V16055S	5.5	3000-054	V20035S	3.5	3000-074
							V16065S	6.5	3000-055	V20045S	4.5	3000-075
							V16075S	7.5	3000-056	V20055S	5.5	3000-076
							V16085S	8.5	3000-057	V20065S	6.5	3000-077
							V16095S	9.5	3000-058	V20075S	7.5	3000-078
										V20085S	8.5	3000-079
										V20095S	9.5	3000-080
										V20105S	10.5	3000-081
										V20115S	11.5	3000-082
										V20125S	12.5	3000-083

ER Spring Collet Chuck System

SUPER ULTRA PRECISION TYPE

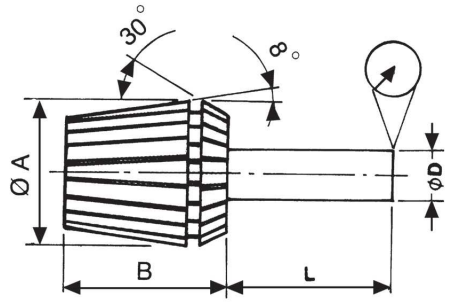

DIMENSIONS

TYPE	D	H
ER08	8.5	13.5
ER11	11.5	18
ER16	17	27
ER20	21	31
ER25	26	35
ER32	33	40
ER40	41	46
ER50	52	60

S GRADE Accuracy

L(mm)	øD(mm)	Ultra Precision(MM)
6	1.0-1.4	0.01
10	1.5-2.9	0.01
16	3.0-5.9	0.01
25	6.0-9.9	0.01
40	10.0-17.9	0.01
50	18.0-26.9	0.01
60	27.0-34.9	0.01

ER-25			ER-32			ER-40			ER-50		
15PCS/SET			18PCS/SET			23PCS/SET			12PCS/SET		
ORDER NO.	CAP. mm Ø	CODE NO.	ORDER NO.	CAP. mm Ø	CODE NO.	ORDER NO.	CAP. mm Ø	CODE NO.	ORDER NO.	CAP. mm Ø	CODE NO.
V25000S	1-16	3000-005	V32000S	2-20	3000-006	V40000S	3-26	3000-007	V50000S	10-34	3000-008
V25020S	2-1	3000-090	V32030S	3-2	3000-110	V40040S	4-3	3000-130	V50120S	12-10	3000-160
V25030S	3-2	3000-091	V32040S	4-3	3000-111	V40050S	5-4	3000-131	V50140S	14-12	3000-161
V25040S	4-3	3000-092	V32050S	5-4	3000-112	V40060S	6-5	3000-132	V50160S	16-14	3000-162
V25050S	5-4	3000-093	V32060S	6-5	3000-113	V40070S	7-6	3000-133	V50180S	18-16	3000-163
V25060S	6-5	3000-094	V32070S	7-6	3000-114	V40080S	8-7	3000-134	V50200S	20-18	3000-164
V25070S	7-6	3000-095	V32080S	8-7	3000-115	V40090S	9-8	3000-135	V50220S	22-20	3000-165
V25080S	8-7	3000-096	V32090S	9-8	3000-116	V40100S	10-9	3000-136	V50240S	24-22	3000-166
V25090S	9-8	3000-097	V32100S	10-9	3000-117	V40110S	11-10	3000-137	V50260S	26-24	3000-167
V25100S	10-9	3000-098	V32110S	11-10	3000-118	V40120S	12-11	3000-138	V50280S	28-26	3000-168
V25110S	11-10	3000-099	V32120S	12-11	3000-119	V40130S	13-12	3000-139	V50300S	30-28	3000-169
V25120S	12-11	3000-100	V32130S	13-12	3000-120	V40140S	14-13	3000-140	V50320S	32-30	3000-170
V25130S	13-12	3000-101	V32140S	14-13	3000-121	V40150S	15-14	3000-141	V50340S	34-32	3000-171
V25140S	14-13	3000-102	V32150S	15-14	3000-122	V40160S	16-15	3000-142			
V25150S	15-14	3000-103	V32160S	16-15	3000-123	V40170S	17-16	3000-143			
V25160S	16-15	3000-104	V32170S	17-16	3000-124	V40180S	18-17	3000-144			
			V32180S	18-17	3000-125	V40190S	19-18	3000-145			
			V32190S	19-18	3000-126	V40200S	20-19	3000-146			
			V32200S	20-19	3000-127	V40210S	21-20	3000-147			
						V40220S	22-21	3000-148			
						V40230S	23-22	3000-149			
						V40240S	24-23	3000-150			
						V40250S	25-24	3000-151			
						V40260S	26-25	3000-152			